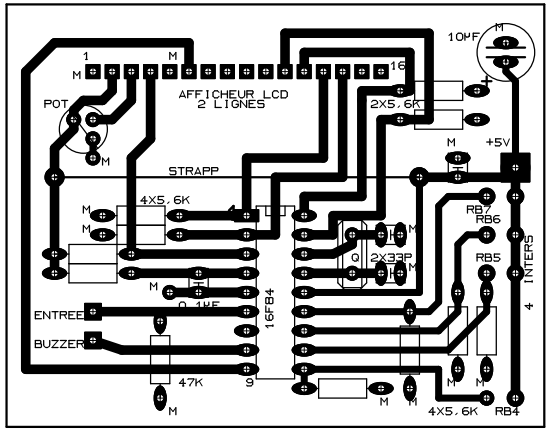
1
M
M
16
10µF
M
AFFICHEUR LCD
2 LIGNES
POT
M
2X5,6K
M
+5V
STRAPP
4X5,6K
M
M
RB7
RB6
M
2X33P
M
RB5
M
0,1µF
16F84
4 INTERS
ENTREE
BUZZER
47K
9
M
M
M
M
4X5,6K
RB4